NEW

C88 *evo*

Professional balancing machine with pneumatic locking
Profesionalna masina za balansiranje tockova sa pneumatskim zakljucavanjem

TOUCH High Definition Touch Screen

3D Automatic measurements with Sonar

EMS Wheel eccentricity

VDD **Virtual Direct Drive**
(CEMB patent)

Zero weight Automatic lift

BWF **Best Wheel Fitting**
The best choice for wheel fitting

Optional

LR Lateral Run Out measurement

NEW

C88

C88 is the new balancing machine for professionals

- Intelligent and automatic system to measure diameter and distance with Cemb gage
- **VDD** very quick measurement system maitenance free (**Cemb Patent**)
- **Electric brake** to lock the wheel in the exact position
- **Locking** of the counterweigh support gage in the correction postion for **ALU** wheels (**Cemb Patent**)

- Shock proof monitor (high definition touch screen).
- **IC concept**, reduction of residual vibration on the vehicle
- Menu for selecting options and customizations
- Autodiagnosis and self-calibration
- **ALU-S** balancing mode (weights inside the rim) with specific counterweight position indicator

- **SPLIT** program to hide weight behind spokes

- New ergonomic cone and adapter holder

- Wheel pneumatic locking (**Cemb Patent**)
  - Mounting/demounting time reduction
  - Extremely easy and quick use
  - Accurate wheel centering guaranteed
  - Possibility to use traditioal adapters (UH20)

Balanserka za putnicka vozila - Rakocevic autoservisna oprema

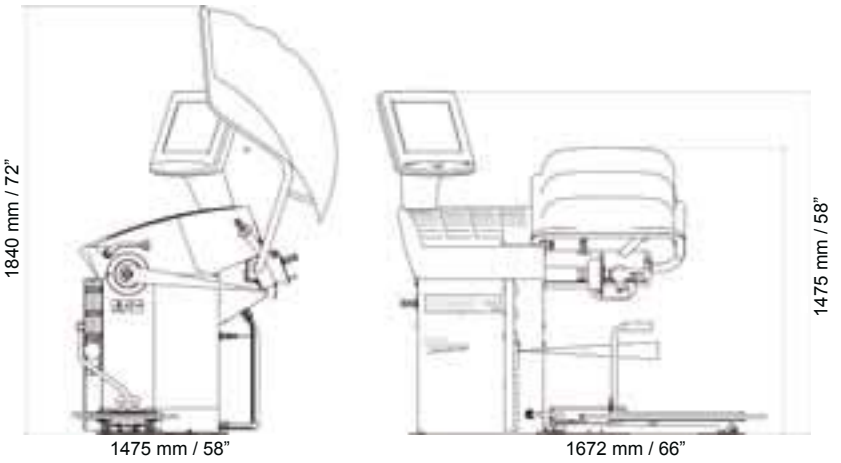

Single phase power supply	115 / 230 V 50 / 60 Hz
Absorbed power	0,65 Kw
Balancing speed	100 rpm
Measuring cycle for 15 kg (33 lb) wheel	4.7 seconds
Measurement uncertainty	0,5 g
Average noise	< 70 dB (A)
Rim width setting range	1.5” ÷ 20” / 40 ÷ 510 mm
Settable diameter	10” ÷ 30” / 265 ÷ 765 mm
Min/max. compressed air pressure	8 ÷ 10 Kg / cm^2 / 18 lbs
	~ 0.8 ÷ 1 Mpa;
	~ 8 ÷ 10 Bar
	~ 115 ÷ 145 Psi
Max. wheel weight	< 75 kg
Machine weight	200 Kg

STANDARD ACCESSORIES

In 1952, Cemb created the cone adapters for balancing machines and since then the company continued developing and producing high precision centering systems for any type of wheel. **Cemb does not recommend the use of non original adapters on its balancing machines.**

UC20/SE2 41FF52768

Pneumatic locking

Standard equipment composed by 3 cones Ø 45÷110 mm, quick locking sleeve SE2, gage, pincer-hammer and 60 gr counterweights.

OPTIONAL ACCESSORIES

Especially designed for car manufacturers.

RL CUP 41FF79255

Large diameter plastic cup with protection polyurethane ring for light alloy rims.

UH20/2 41FF42048

Adapter with adjustable self-centering studs for wheels with 3,4,5,6 holes (on a Ø from 95 to 210 mm), with/without central hole (Renault, Peugeot and Citroën).
Back centering double cone (Cemb patent) grants an excellent precision (double accuracy compared to similar adapters on the market).

Peugeot-Citroën kit 41FF73171

High precision kit composed of 1 bush Ø60 + 2 cones (Ø62 ÷ 68 mm and Ø54 ÷ 60 mm). Developed according to Peugeot and Citroën specifications..

VL/2 cone + G36 disc 41FF86174

Kit for light truck wheels (Ø 97÷170mm central hole).

SR4 - SR4/SE - SR5 - SR5/SE SR5/2 SR5/2/SE - SRUSA - SR/USA/SE

Stud adapters for wheels with 4 or 5 holes.
To improve balancing accuracy and to prevent rim paint damaging. Studs are made of two pieces, elastically coupled: pressure is therefore homogeneous on all the holes.

RENAULT kit 41FF77152

High precision kit composed by 5 bushes (Ø60 / 66 / 71 / 88 / 129,9 mm). Developed according to Renault specifications.

MT cone 40FF57321

High precision graduated cone for Porsche - Audi - Volkswagen - Opel - BMW - Smart and other brands (with central hole Ø56,5 / 57 / 66,5 / 72,5 mm).

Mercedes Kit 41FF88003

High precision kit composed by 3 cones (Ø57- Ø66,5 -Ø84/85) + one back spring, according to Mercedes Benz specifications.

For more information see the complete brochure on the web site www.cemb.com

PROGRAMS

Tyre train: New function that identifies the optimal fitting position of a set of wheels on the vehicle. In this way, the “best” wheels are fitted on the front, known to be more sensitive to vibrations.

New statistics program:

- Counts the number of daily and total spins.
- Displays the value of the weight saved by means of daily and total IC.
- Divides the counterweights used by number, weight value and type (clip-on/ adhesive).

Eccentricity measuring system (1st Harmonic and Peak to Peak) with Sonar (option). It is automatically activated during balancing cycle allowing operators to get the information about wheel eccentricity without any time loss. Alarm alert if eccentricity is out of tolerance. Specifies the procedure recommended to reduce the eccentricity.

When you correct an unbalance, according to wheel/car manufacturers, the balancing tolerance is always referred to the external planes of the rim.
Inside the rim (ALU-S) the residual unbalance detected after correction is generally relative to correction planes which are NOT referred to the balancing tolerance. With this new program, applicable thanks to the use of SONAR, the residual calculated at external planes is displayed. This enables to avoid balancing errors or any unnecessary correction operation.

AUTOMATIC MEASUREMENTS WITH DEDICATED SONARS

Diagnosis without wasting time with problems due to the wheel.
Radial and lateral eccentricity measured without contact (Sonar system)
Diagnosis with expert computerised system.

Possible matching between rim and tyre.
Automatic selection of wheel arrangement on the vehicle.

Sonar LA: automatic width measures.

Sonar EMS: no contact automatic radial eccentricity measure.

Sonar LR: no contact lateral eccentricity measure.

ZERO WEIGHT LIFT - CEMB PATENT

Innovative integrated wheel lifting system

- **Zero weight effect:** the patented electropneumatic system automatically eliminates the wheel weight during mouting and demouting on the wheel balancer and hence no effort or adjustment is required.
- **Perfect centering:** thanks to the “Zero Weight” effect, any negative effect caused by the weight of the wheel on the adapter during centering is minimal.
- **Improved centering precision:** centering quality and repeatability can be compared to those ones obtainable with vertical axis machines.
- **Speed:** quicker than any other traditional lift.
- **Pratical:** the intelligent ascent and descent device eliminates any manual adjustment, required by any others lift on the market. One single pedal controls the entire working cycle.
- **Automatic:** provided with an integrated electronic PLC and pneumatic system.
- **Universal:** applicable on any wheel balancer, provided with wheel guard.

Compulsory for heavy wheels!!!

According to the current works safety regulations and ISO regulations it is not permitted to lift weights over a certain value, depending on the position of the load.*
In case of a wheel and a wheel balancer, the maximum permitted value is: MAX 16 KG !!!

Exceeding this limit may lead to physical as well as insurance problems and an operating ban! In the event of operator injury, there is a risk of prosecution and the obligation to pay compensation for damages.

*According to Annex C of the ISO 11228-1 regulations and the NIOSH calculation methodology guidelines.

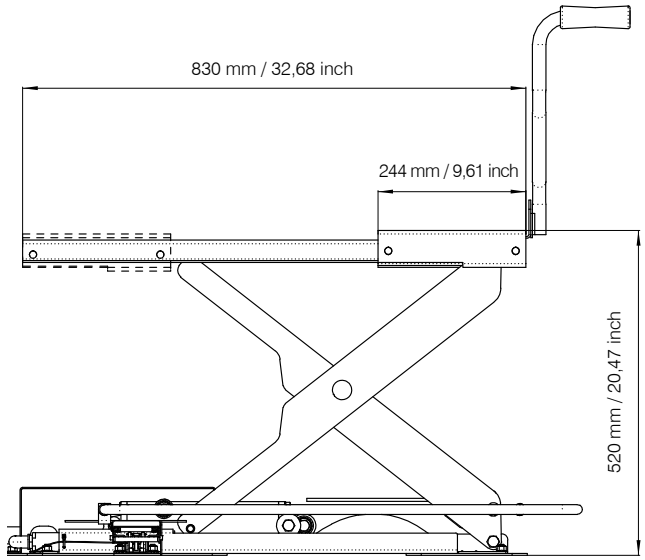

For more information see the complete brochure on the web site www.cemb.com

OPTIONAL

Professional printer

Possibility to personalize
the balancing certificate

CEMB
BALANCING MACHINES

Some of our customers:

FERRARI • MASERATI • LAMBORGHINI • MERCEDES-BENZ • BMW • VOLKSWAGEN • FIAT • LANCIA • ALFA ROMEO • FORD NISSAN • RENAULT • HARLEY DAVIDSON • HONDA • YAMAHA • SUZUKI • KAWASAKI • KTM • DUCATI • TRIUMPH • APRILIA - PIAGGIO • MOTO GUZZI • PIRELLI • BRIDGESTONE • MICHELIN • CONTINENTAL • DUNLOP • GOODYEAR • BREMBO • METZELER

CEMB
BALANCING MACHINES

Tecnologia Cemb

ITALIAN HEART: All parts which influence the quality of our balancers are manufactured within Cemb through appropriate machinery. The tolerances used are the most accurate on the market. Only in this way it is possible to maintain a constant and accurate balancing through time.

VDD - New: Defined as a "Maintenance Free" concept, it allows maximum accuracy in minimum time, increasing reliability and features of all Cemb balancers. This has been possible thanks to a new patented system of measurement (both mechanical and electronic) as a result of Cemb's unique experience in the field of industrial balancing and vibration analysis instrumentation. With the VDD even the most economic Cemb balancer wins against any of its competitors in both speed and accuracy.

CEMB FOR THE ENVIRONMENT
Our machines save much more energy than you would think! We care for the environment, as much as we care for your costs: these are our priorities. Save money! Save the environment!
Buy our machines.Ask for more details, we are at your full disposal.

CEMB S.p.A.
Via Risorgimento, 9
23826 Mandello del Lario (LC) Italy
www.cemb.com

Garage equipment division
CEMB - ITALY
Plant and Training Center
phone +39 0341 706369
fax +39 0341 700725
garage@cemb.com

CEMB USA
BL Systems Inc.
2873 Ramsey Road
Gainesville, GA 30501 - USA
Phone +001 678 717 1050
Fax +001 678 717 1056
sales@cemb-usa.com

AC88 EVO 20 07/10

All the data and features mentioned in this catalogue are purely for information and do not constitute any commitment on the part of our company, which reserves the right to make any and all alterations it may consider suitable without notice.